AQUABIN

USER'S MANUAL

PRODUCT MARKED
CE
COMPLIANT WITH
EN 12566-1

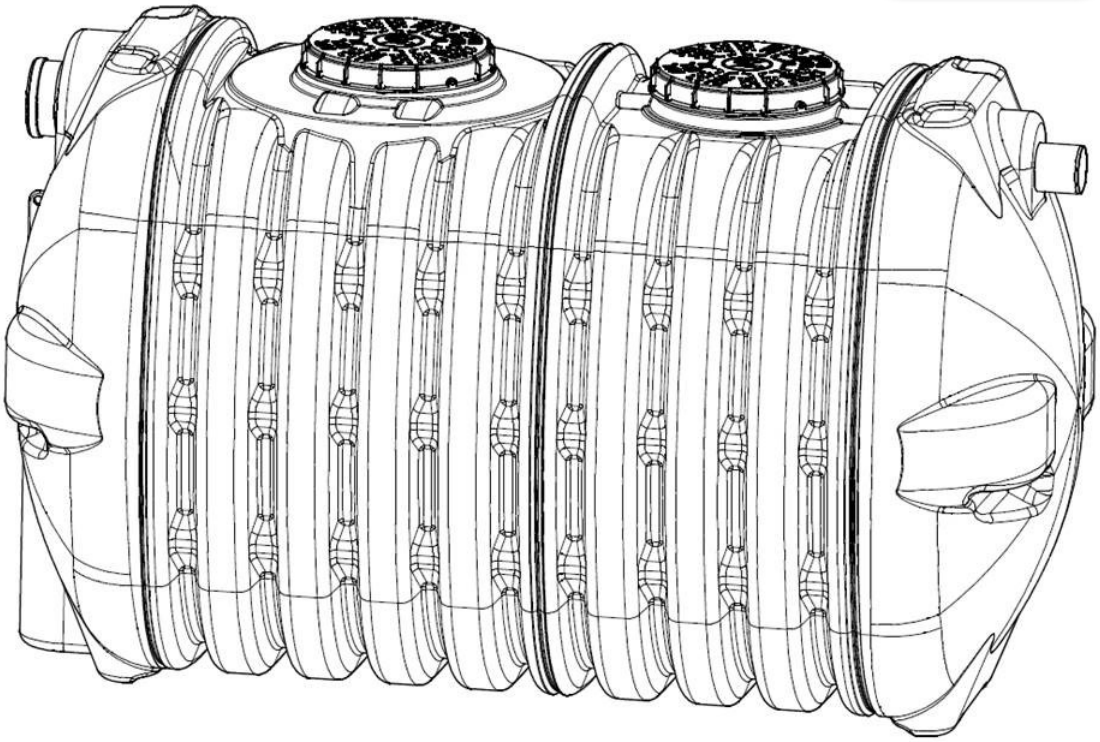

DOMESTIC TREATMENT PLANT

AB (SINGLE-CHAMBER AND TWIN-CHAMBER)

Introduction

Dear Users,

Thank you for purchasing the *AB* domestic treatment plant. Our product has been designed for installation at single-family houses located in dispersed settlements, where it is not economically reasonable to run a collective sewage system.

The construction of a domestic sewage treatment plant is an excellent alternative to a sealed septic tank in terms of convenience. The individual sewage treatment plant is convenient, cheap to operate, environmentally friendly and safe. The expenditure incurred in purchasing and installing the plant, compared to operating a typical sealed septic tank, should pay for itself within a few years of use.

The device you own has been manufactured on the basis of RIKUTEC tanks. It is characterised by high quality and proven design. The treatment plant set includes a septic tank AB, drainage pipes or infiltration tunnels, a distribution box, a collection box and other accessories.

In this User's Manual you can find a lot of valuable information, as well as tips necessary for the correct installation and commissioning of the unit. We recommend that you read its contents carefully before proceeding with the installation.

Selected chapters of the User's Manual describe in detail the construction of the sewage treatment plant, the principles of its correct operation and maintenance. It is a collection of valuable information intended for the user, which will be useful in the daily operation of the *AB* sewage treatment plant.

We hope that your purchase will meet your expectations and provide years of trouble-free use.

We encourage you to purchase our other products.

Your AQUABIN Team

O Description and design of the device

Domestic sewage treatment plants are an excellent alternative to the sealed septic tank in terms of convenience. The installation of a septic tank, including its purchase, costs less than the installation and purchase of a sewage treatment plant, but the operation of the septic tank itself is considerably more expensive. The economic benefits of choosing a domestic sewage treatment plant should therefore be considered over a longer period of time. On average, the investment pays for itself after a few years.

The AB domestic sewage treatment plant is a classic drainage treatment plant built on the basis of monolithic tanks with capacities of 2000, 3000 and 4000 litres. The tanks have been manufactured using extrusion blow moulding technology with polyethylene. The AB septic tank has an inlet with a diameter of Ø160 mm and an outlet with a diameter of Ø110 mm. The septic tanks are also equipped with a **basket filled with** PP filter **material**, which is installed at the outlet of the tank. The use of a filter increases the level of wastewater purification in the sedimentation tank, which has a measurable effect on the life span of the infiltration plot.

The septic tank is the basic equipment used in domestic sewage treatment plants. In the septic tank, the processes of sedimentation and flotation of waste water pollutants and sediment sludge fermentation take place. They are designed for installation at single-family houses and holiday homes.

AB septic tanks are **single-chamber (2000, 3000 and 4000l)** and **twin-chamber (3000 and 4000l)** high-density polyethylene PEHD **tanks**. A baffle placed inside the tank divides the tank into two sewage treatment chambers: a preliminary chamber and a main chamber.

Twin-chamber septic tanks are characterised by higher treatment efficiency by providing better conditions for sedimentation as well as flotation inside the accumulated pollutants.

AB sewage treatment plants are CE-marked and comply with **PN-EN 12566-1.**

Figure 1: AB septic tank types: from left - AB 2000 (single-chamber only), AB 3000 (single and twin-chamber), AB 4000 (single and twin-chamber)

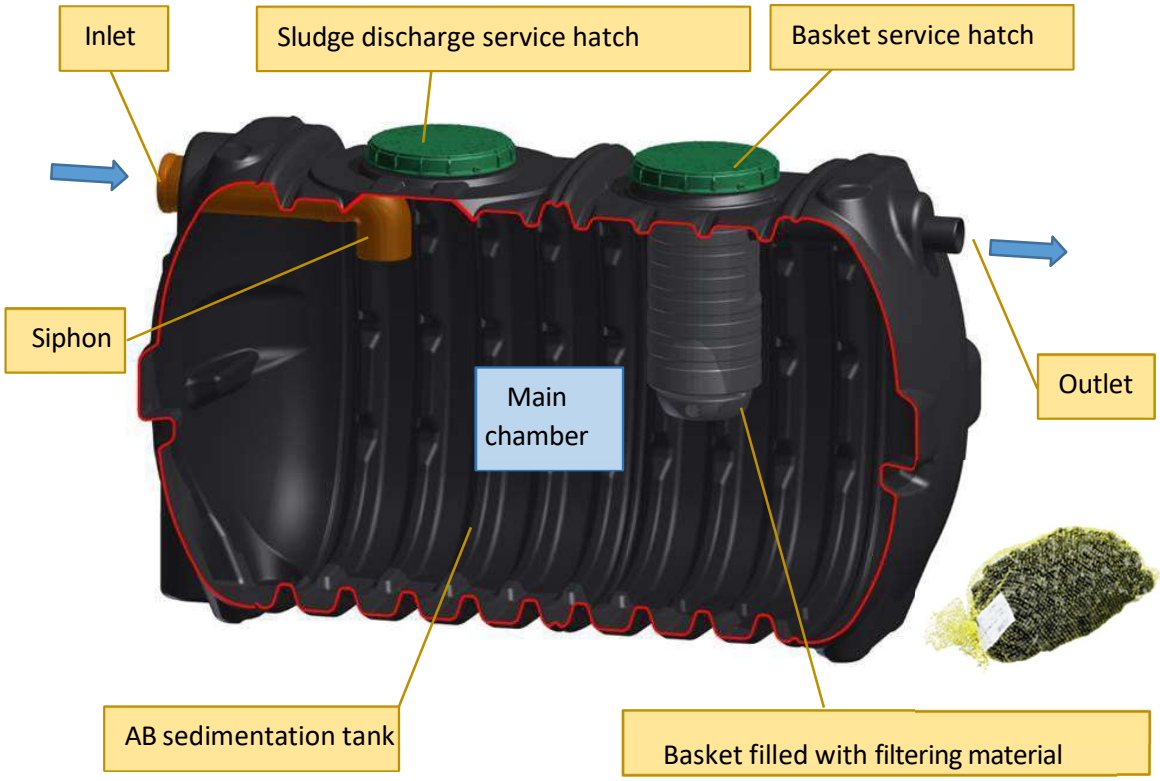

Figure 2: 3000 AB single-chamber septic tank - cross-section of the unit.

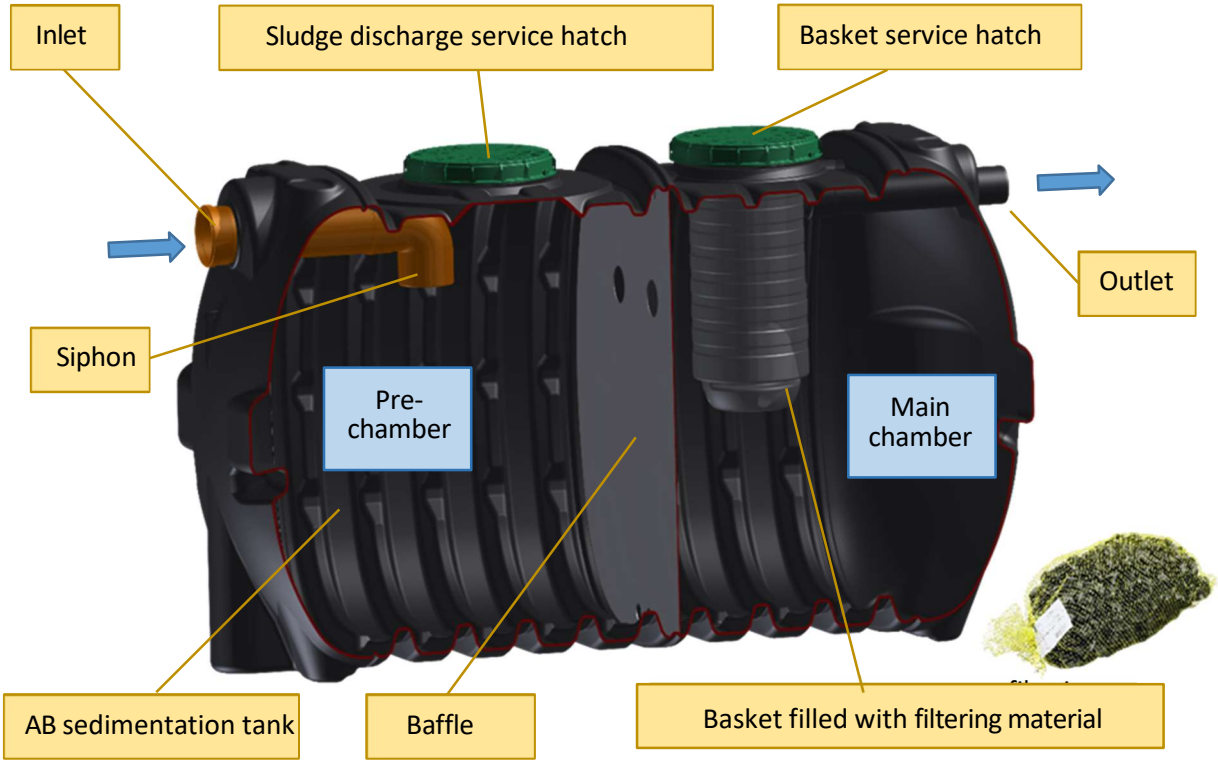

Figure 3: 3000 AB twin-chamber septic tank - cross-section of the unit.

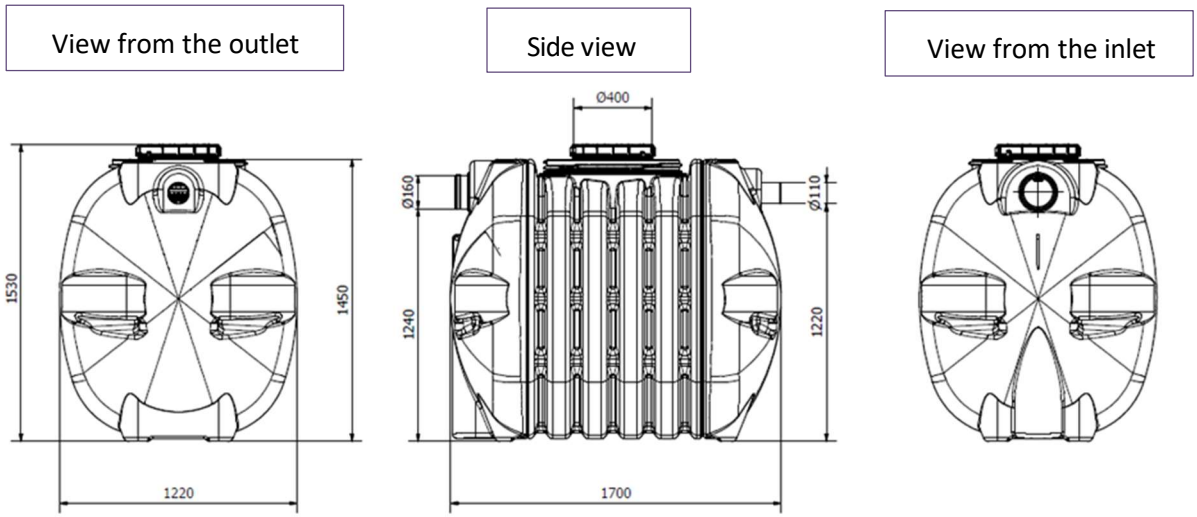

Figure 4: 2000 AB septic tanks – characteristic dimensions

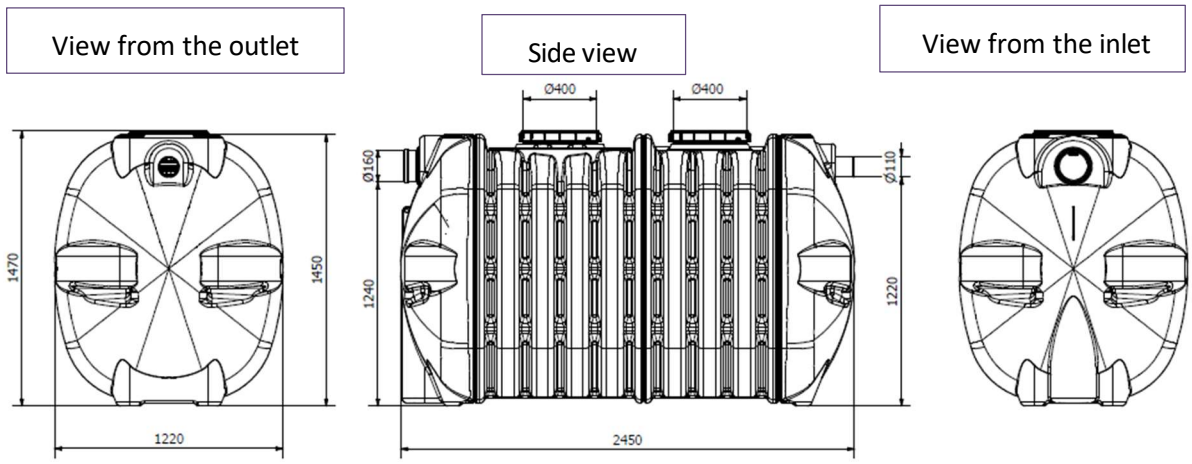

Figure 5: 3000 AB single-chamber and twin-chamber septic tank – characteristic dimensions

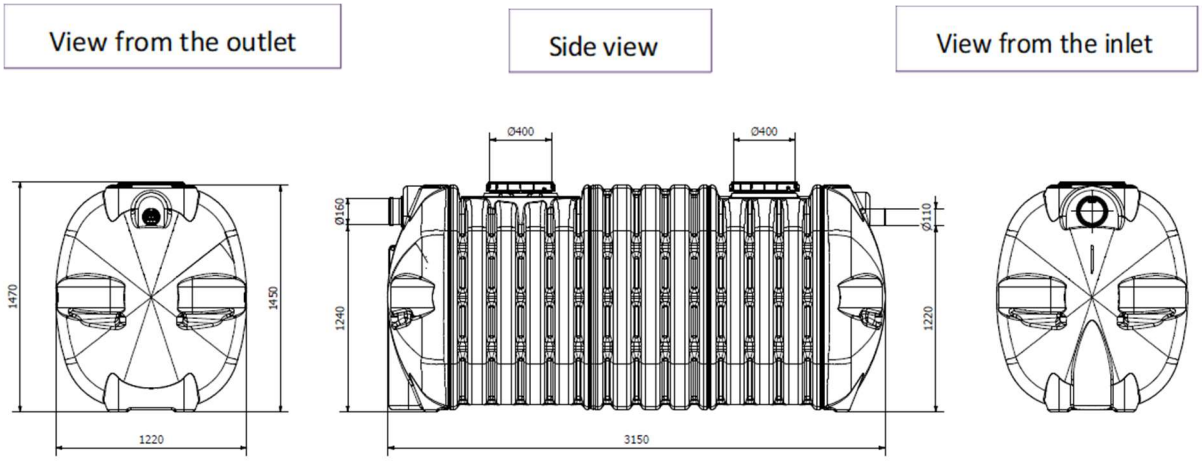

Figure 6: 4000 AB single-chamber and twin-chamber septic tank – characteristic dimensions

Table 1: Technical data of the AB septic tanks

Name of treatment plant	System volume [l]	Inlet diameter [mm]	Outlet diameter [mm]	Length [mm]	Width [mm]	Overall height [mm]	Height to inlet [mm]	Height to outlet [mm]	Manhole covers [mm]	Tank weight [kg]
2000 AB	2000	160	110	1700	1220	1530	1240	1220	1x400	95
3000 AB	3000	160	110	2450	1220	1470	1240	1220	2x400	105
3000 AB (2Ch)	4000	160	110	2450	1220	1470	1240	1220	2x400	110
4000 AB	1500+ 1500	160	110	3150	1220	1470	1240	1220	2X400	145
4000 AB (2Ch)	2000 +2000	160	110	3150	1220	1470	1240	1220	2X400	150

Septic tanks are the basic equipment used in domestic sewage treatment plants. The correct choice of septic tank makes it possible to achieve optimum performance of the sewage treatment system.

Table 2: Performance of AB septic tanks

Type of sedimentation tank	Number of users - p.e. (population equivalent)	Daily nominal flow [l/day].
2000 AB single-chamber	1-4	600
3000 AB 1 and 2 chambers	4-6	900
4000 AB 1 and 2 chambers	6-8	1200

AB septic tanks have been manufactured in accordance with **PN-EN 12566-1 and carry the CE mark.**

Twin-chamber septic tanks are devices which provide increased efficiency of sewage treatment in comparison with single-chamber septic tanks. The use of an additional chamber allows for the separation of inorganic fractions and retention of all heavy and light impurities within the primary chamber of the sedimentation tank. The second chamber of the septic tank contains a basket filled with filter material. This design of the septic tank allows for a three-stage sewage treatment process: pre-chamber, main chamber and settling basket.

Table 3: Contents of the AB sepric tank kit with drainage pipes

Name	Unit	Treatment plant *2000 AB* DRAINAGE	Treatment plant *3000 AB* DRAINAGE
AB **single-chamber** septic tank	[pcs.]	1	1
Distribution box D300 AQR	[pcs.]	1	1
Collection box D300 AQZ	[pcs.]	1	1
Drainage pipe Ø110/2000 mm	[pcs.]	16	24
Solid pipe Ø110/1000 mm	[pcs.]	4	4
Elbow Ø110 mm	[pcs.]	4	4
Geotextile 500 mm wide	[m.]	50	50

Table 4: Contents of the AB septic tank kit with seepage tunnels

Name	Unit	Treatment plant *2000 AB* TUNNELS	Treatment plant *3000 AB* TUNNELS
AB **single-chamber** septic tank	[pcs.]	1	1
Distribution box D300 AQR	[pcs.]	1	1
Collection box D300 AQZ	[pcs.]	1	1
Drainage tunnel 150	[pcs.]	12	18
End plate of tunnel 150	[pcs.]	4	4
Solid pipe Ø110/1000 mm	[pcs.]	4	4
Elbow Ø110 mm	[pcs.]	4	4
Geotextile 500 mm wide	[m.]	50	50

Figure 7: Prefabricated sets of septic tanks 3000 AB with drainage pipes (left) and infiltration tunnels (right)

Ready-made sedimentation tank sets have been configured for the 2000 and 3000 single-chamber sedimentation tanks only.

O Operating principle

Domestic wastewater from the house flows into the AB septic tank. In the septic tank, the anaerobic sewage treatment process takes place. In addition, the wastewater is separated into light and heavy fractions. The organic pollutants retained in the septic tank are pre-decomposed by anaerobic digestion processes.

The pretreated wastewater flows to further treatment in the infiltration system. This is the second stage of treatment, also known as aerobic sewage treatment. Its purpose is to remove the remaining water-soluble organic substances from the wastewater. This stage uses a natural aerobic process that involves the biochemical breakdown of pollutants. Mainly bacteria, for which the contents of the wastewater provide food, are used for this purpose.

In order for the treatment process to be effective, the correct choice of septic tank volume is required. When determining the volume of the septic tank, the number of people living in the household to which the sewage treatment plant is connected should be taken into account in the first place, as well as the actual water consumption of the household.

Twin-chamber septic tanks are characterised by increased efficiency in sewage treatment, retaining mainly the large fractions inside the first chamber of the tank. This design of the septic tank limits inorganic fractions from entering the chamber with a basket filled with filtering material. Thanks to the baffle, fats and any floating impurities are also retained in the first chamber of the sedimentation tank.

O Installation of treatment plants

When selecting a site for the sewage treatment plant, it is important to ensure that none of the pollutants will seep into the groundwater and other facilities located in the vicinity (for example, wells, rivers, ponds). Planning the installation of a sewage treatment plant is not limited to determining whether it will fit on a specific plot of land.

Its location is determined not only by the size of its individual components and the requirements for their installation in relation to each other, but above all by the possibility of maintaining appropriate distances from other objects that may be affected. In order to correctly locate the sewage treatment plant, it is necessary to follow the principles of correct installation outlined below.

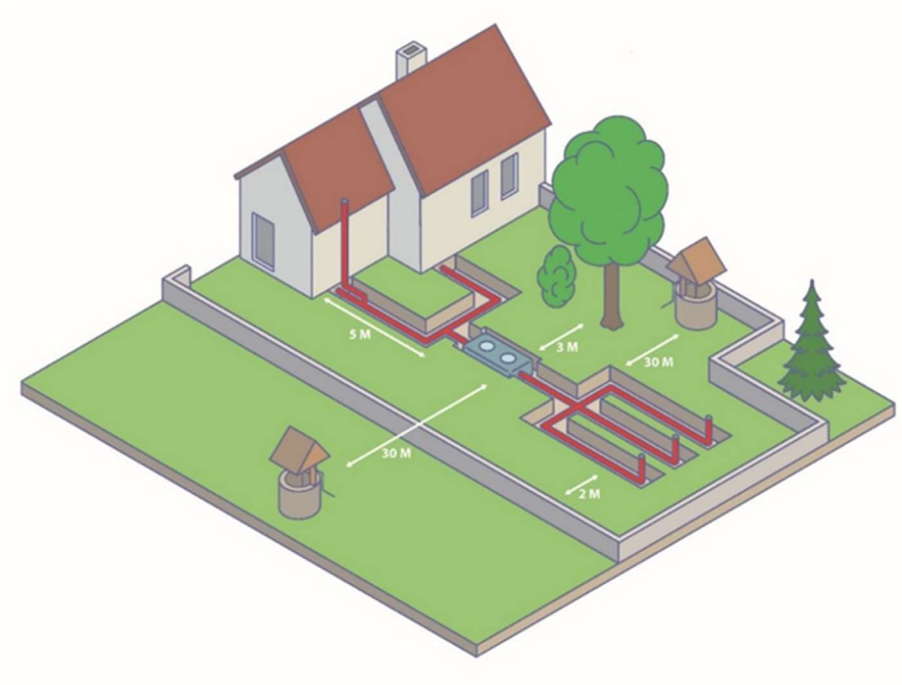

Figure 8: Installation of the *AB* sewage treatment system - location of the plant

Location of treatment plant - manufacturer's recommendations:

- Distance from buildings - minimum 5 metres, maximum 10 metres,
- Distance from plot boundaries - minimum 2 metres,
- Distance from trees and shrubs - minimum 3 metres,
- Distance from water intakes - minimum 30 metres.

The infiltration system (drainage pipes or infiltration tunnels) should be located below the surface of the ground, at a depth of no more than 40-100 cm. The deeper the sewage infiltration system is buried in the ground, the less atmospheric oxygen required for sewage treatment will reach it. The septic tank should not be buried too deep. The optimum depth is considered to be around 20-40 cm below ground level. The maximum foundation depth of the tank is approximately 40 cm. Install the septic tank using lean concrete (1m^3 sand mixed dry with 200 kg cement). The pipe carrying wastewater from the building to the settling tank should maintain a 2-3% slope.

Table 5: Quantities of auxiliary materials for the installation of AB treatment plants

Name	Unit	AB 2000 Plant DRAINAGE	AB 200 Plant TUNNELS	AB 3000 Plant DRAINAGE	AB 3000 Plant TUNNELS
Minimum amount of aggregate required under the infiltration system	[m^3]	8	0.8	12	1,2
Minimum amount of dry concrete for sedimentation tank installation	[m^3]	3	4	3	4

Table 6: Dimensions of the plot of land required for the installation of the AB treatment plant

Name	Unit	AB 2000 Plant DRAINAGE	AB 200 Plant TUNNELS	AB 3000 Plant DRAINAGE	AB 3000 Plant TUNNELS
The dimension of the plot necessary for installation	[m x m]	3 x 20	3 x 11	3 x 29	3 x 16

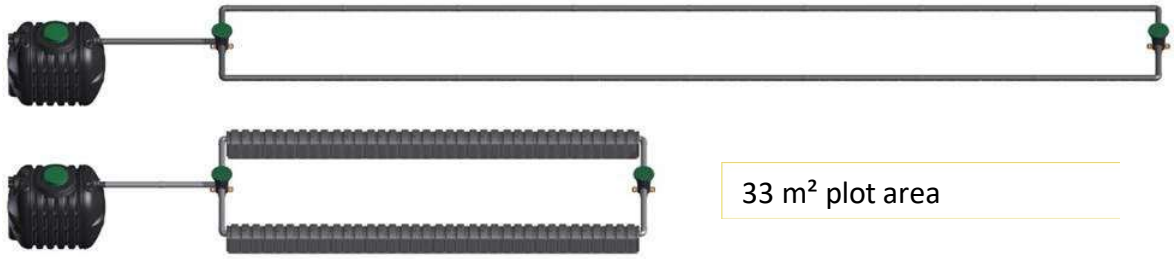

Figure 9: Comparison of plant sizes for the 2000 AB settling treatment plant

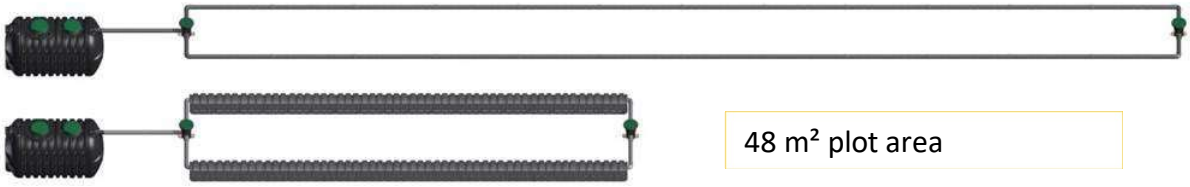

Figure 10: Comparison of plant sizes for the 3000 AB settling treatment plant

The use of an AB septic tank with seepage tunnels allows:

- 50% reduction in the area required for a drainage plot in relation to drainage pipes,
- 40% reduction in the area required for the installation compared to a sedimentation tank with drainage pipes,
- 90% reduction in the amount of aggregate required,
- installation of plots in areas of vehicular traffic up to 3.5T

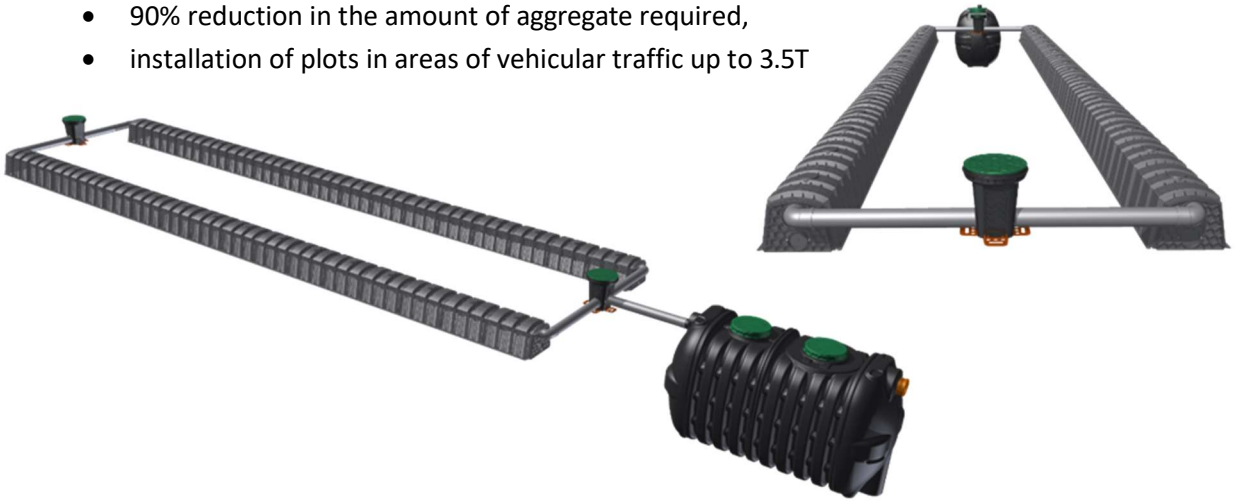

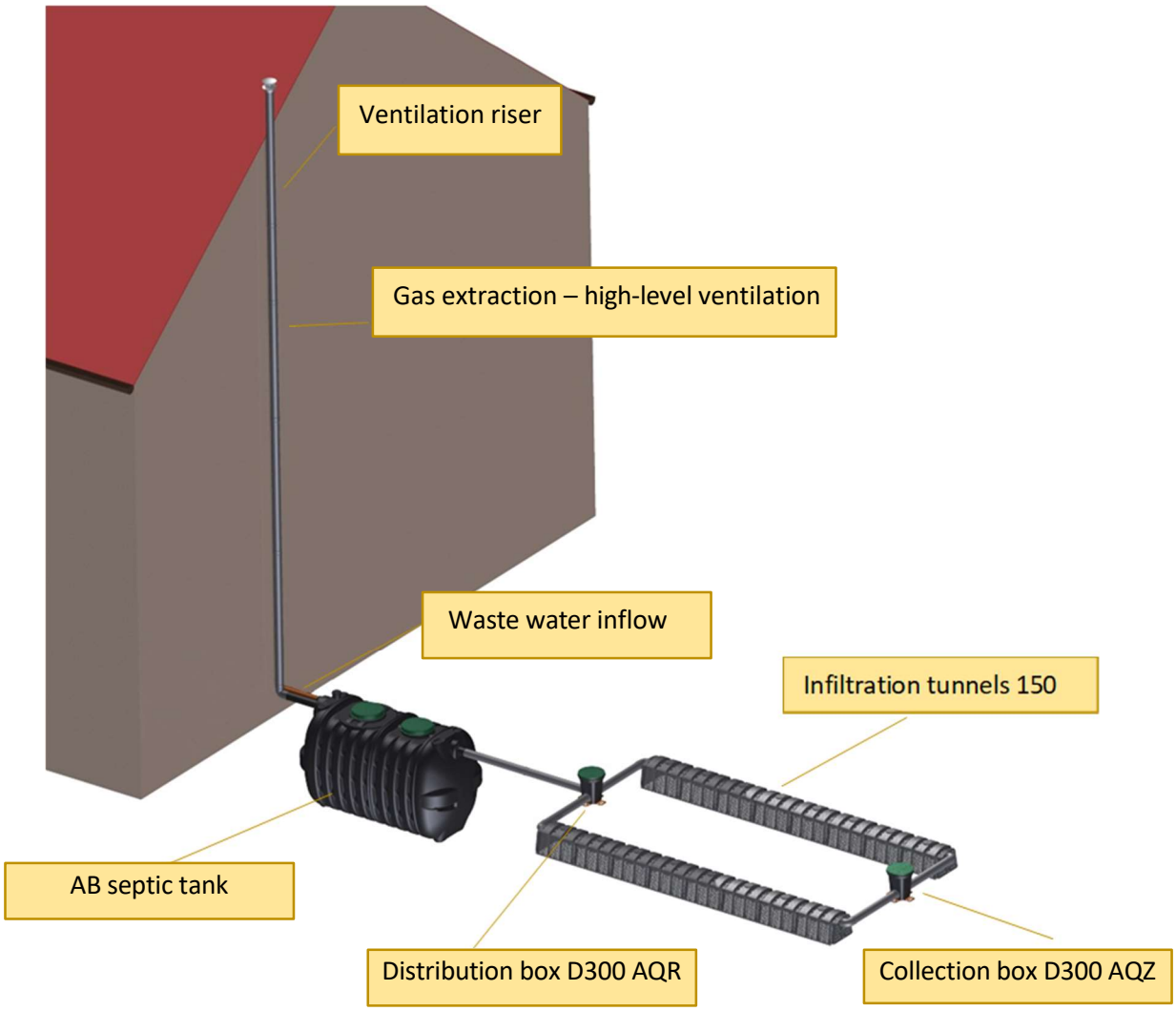

Figure 11: Assembly of the *OPTIMAX* sewage treatment plant at a single-family house

Step-by-step installation:

- Collect the humus for use on completion of the works.
- Carry out the excavation. The dimensions of the trench (length, width) should be approximately 50 cm larger than the dimensions of the tank.
- Spread a minimum 10 cm layer of lean concrete sub-base (1m^3 sand mixed dry with 200kg cement) on the bottom of the trench.
- Place the septic tank on the bedding and level it carefully, maintaining the direction of the sewage flow. Around the perimeter of the septic tank, make an approx. 25 cm thick lean concrete backfilling to the level of the upper edge of the inspection service hatchs. The backfilling should be compacted by pouring water over it.
- **Perform backfilling of the excavation gradually with simultaneous filling of the tank with water to balance the pressure forces. The water level in the tank should be about 10 cm higher than the backfilling level**.
- The unit should be installed so that inspection service hatch covers are visible and accessible for servicing. In the case of deeper foundation of the unit, additional superstructures should be used for the tank and service hatch.

- The plant should be connected to a high-pressure ventilation system in order to ensure correct discharge of gases from the treatment plant.

NOTE: Do not drain the unit in the first month after installation in the ground.

NOTE: Instructions for the installation of a pipe-built infiltration drain are described in the section - complementary accessories.

NOTE: Instructions for installing a drainage system built on the basis of drainage tunnels are described in the next section - Supplementary accessories.

NOTE: The sewage treatment plant must be equipped with a system for the discharge of gases generated during the fermentation of the wastewater. The system consists of high-level ventilation as well as low-level ventilation.

The AB plants have an opening at the top of the inlet siphon, through which the gases generated during the fermentation of the wastewater are discharged into the sewage riser. The opening is located above the sewage level in the tank. If there is no sewage riser above the roof ridge, a tee should be installed in front of the settling tank to connect a dedicated high level ventilation riser.

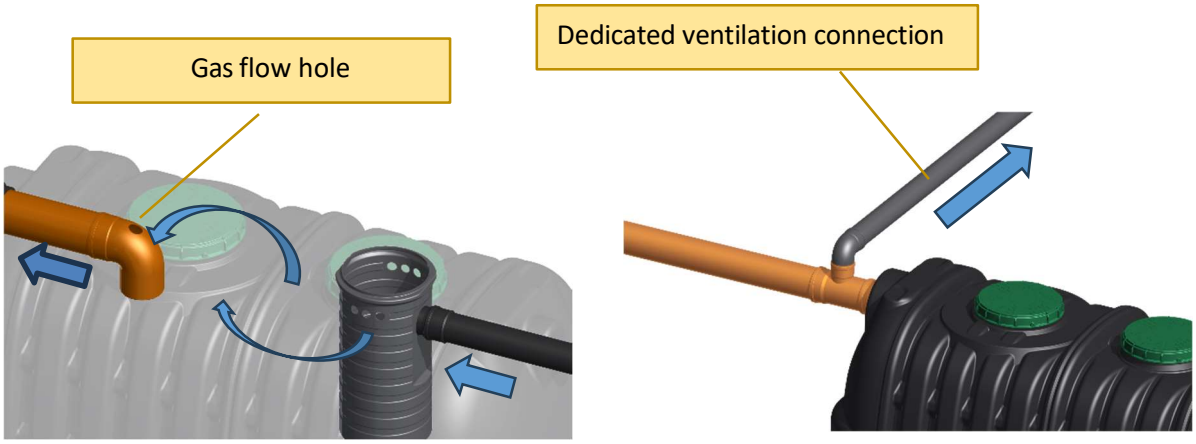

Figure 12: Gas discharge in AB treatment plants: left, using a sewer riser, right, with dedicated high-pressure ventilation connection

O Installation - drainage pipes

The drainage pipes should be laid in the trench notched downwards. The width of the trench should be a minimum of 50 cm. The resulting drainage pipe strands should not be laid less than 150 cm apart. The drainage pipe strands should be placed at a depth of 40 cm to a maximum of 100 cm. Ideally, the drainage should be installed as shallow as possible. This facilitates access to oxygen and the formation of aerobic bacteria involved in sewage treatment.

Key installation guidelines:

- width of drainage ditch: 0.5 m
- minimum distance between drainage strands: 1.5 m
- recommended drainage slope: 1% (1 cm for every 1 metre)

- The length of one drainage line should not exceed 20 m, minimum 6 m.

The drainage strands extend from the distribution service hatch. They must not cross each other. It is also not advisable to connect the pipes one to another. Each drainage line must be terminated with an aeration connection that ensures the proper exchange of gases in the line and, therefore, the proper treatment of the sewage. The aeration connection can also be used for maintenance operations - drain cleaning. The AQZ collection box is used for this.

In the case of poorly permeable soils (e.g. clay, loam), the depth of excavation should be greater. The poorly permeable soil should be replaced and replaced with sand with a layer of approximately 70 cm. For poorly permeable soils, it is also recommended to increase the amount of infiltration drainage to 12 metres per user.

The drainage line should be placed in a trench filled with additional material to aid aerobic treatment. From the bottom of the trench, the following layering is recommended:

- 20 cm of sand (1)
- 40 cm layer of 16/32 crushed gravel or gravel without limestone (2)
- drainage line (3)
- 10 cm layer of 16/32 crushed gravel or gravel without limestone (4)
- geotextile (5)
- native soil (6)

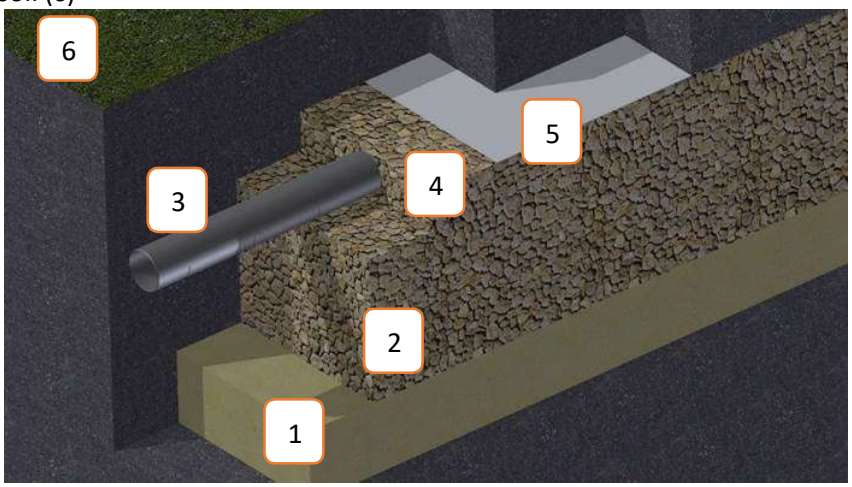

Figure 13: Installation of infiltration bed with drainage pipes

O Installation – infiltration tunnels 150

The 150 infiltration tunnels are designed for infiltrating wastewater containing pollutants from industrial processes and households into the ground. The construction of the tunnels also allows them to be used for storing and infiltrating rainwater. The tunnels are laid in the ground to form gravitational infiltration basins. The tunnel has longitudinal slots on the side walls through which sewage and rainwater can be infiltrated into the ground. The 150 infiltration tunnels are made of HDPE (high density polyethylene), using the plastic injection method. The production method used makes it possible to obtain products with a compact and lightweight construction. Each tunnel has ribbing to reinforce the structure. The height of the lateral tunnel perforations is 300 mm. The capacity of a single tunnel is **150 litres.**

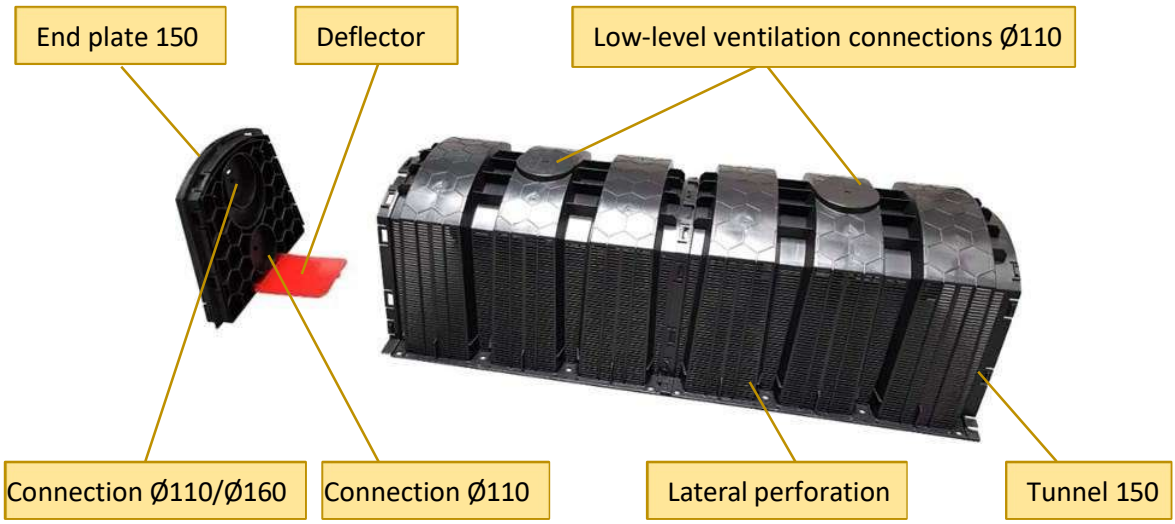

Product specifications

Name	Length [mm]	Width [mm]	Height [mm]	Weight [kg]	Drainage area [m2]			Product code
					bottom	lateral	total	
Tunnel 150	1200	500	360	5	0.6	0.7	1.3	2255
End plate 150	435	335	43	1.2	-	-	-	2256

The dimensions of the tunnels and lids are shown in the table. The tolerance of all parameters for each tunnel is +/- 2%.

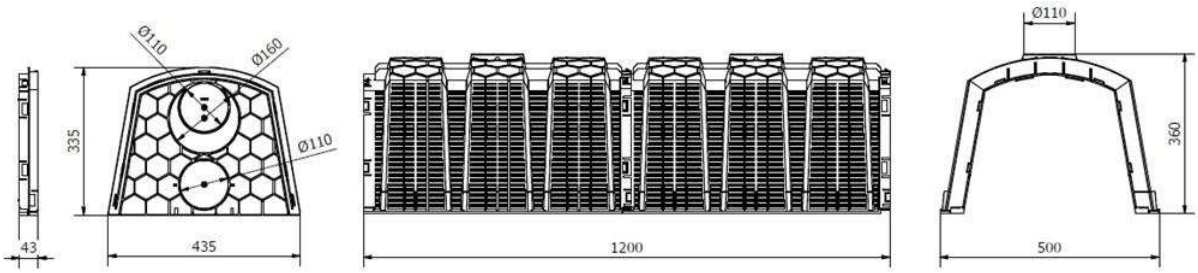

Figure 14: Infiltration tunnel 150 - characteristic dimensions

The capacity of a single infiltration tunnel is 150 litres (0.15m³).

At the beginning of the tunnel line, a lid equipped with a deflector is installed. The purpose of the deflector is to absorb the hydraulic impact of the inflowing sewage or water. Through its use under the tunnels, the soil at the point of inflow of wastewater or water is not washed away. The deflector is also installed at the end of the tunnel line. The bed must be equipped with an air supply at the end. This can be done by using one of the two connections located on the top wall of each tunnel or by using the top connection in the end plate. The connections at the top of the tunnel can also be used to revise the tunnel thread.

The minimum width of the deposit excavation should be 0.5 m and the minimum distance between the strands is 1 m. The bottom of the trench should be carefully levelled. On the bottom of the trench, lay a drainage support layer (1) consisting of stones with a 16-32 mm fraction or aggregate (without limestone) with a 32-64 mm fraction, with a thickness of not less than 100 mm. Provided that well permeable soils are present. The support layer may be increased as desired depending on the soil and water conditions. The tunnels should be covered with geotextile (2). Lay the tunnel strands with a gradient of approximately 1%. The tunnels are laid at a maximum depth of 1200 mm from the ground surface to the top edge of the tunnels. The length of a single line of tunnels should not exceed 30 m. Each line of the bed should be equipped with an air supply - low-level ventilation. Backfill with native soil (3). A supporting layer is not required for rainwater infiltration.

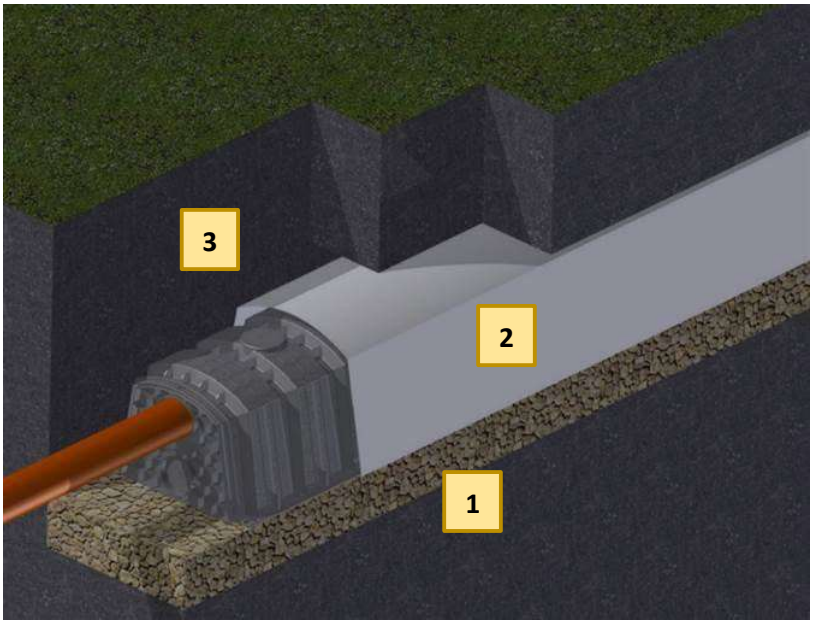

Tunnel beds can be installed in traffic areas and under car parks where there is car traffic of up to 3.5 tonnes. In this case, a minimum ground surface of 50 cm must be maintained between the ground surface and the top edge of the tunnels.

Selection guidance - septic tanks and biological treatment plants

The manufacturer recommends a minimum value of tunnels per user when planted in well-permeable soils:

- Septic tanks **3 tunnels per user (p.e.)**
- Aerated sewage treatment plants (biological) **2 tunnels per user (p.e.)**

The number of tunnels as well as the thickness of the support layer should be selected according to the current soil and water conditions.

The manufacturer recommends carrying out periodic inspections of the bed. It is important that the bed strands are evenly loaded with sewage or rainwater. In order to avoid overgrowth of the chambers by roots, the planting of trees and plants with long root systems is prohibited in the close vicinity of the infiltration basin made of 150 tunnels. All foundation conditions of the bed must be in accordance with the manufacturer's recommendations.

1. Prepare tunnels

2. Remove deflector

3. Drill a hole

4. Fit the deflector

5. Secure with screw6

6. Clip on the lid

7. Check connection

8. Connect the tunnels

9. Fit the end plate

10. Drill a hole on the back

11. Install the vent

12. Check connection

O Installation – distribution box D300 AQR

The D300 AQR distribution box is a device responsible for the distribution of wastewater to the infiltration drainage system or biological bed. The box can also be used for rainwater drainage or have a technical function in various types of installation.
The AQR distribution box is a monolithic cylinder with a height of 410 mm and a service hatch diameter of 300 mm, made of high-density PEHD polyethylene by plastic injection. The distribution box is equipped with a leak-proof (solid) cover Ø300 mm. The service hatch can have one inlet and up to three outlets for the infiltration basin. The heights of the inlets and outlets are defined on the distribution box walls. The distribution box are fitted with a screwable polyethylene superstructure. Four sealing gaskets are provided with each service hatch for installation in the sockets on the service hatch. The sockets are blanked off. They can be cut out with a knife or standard hole saw.

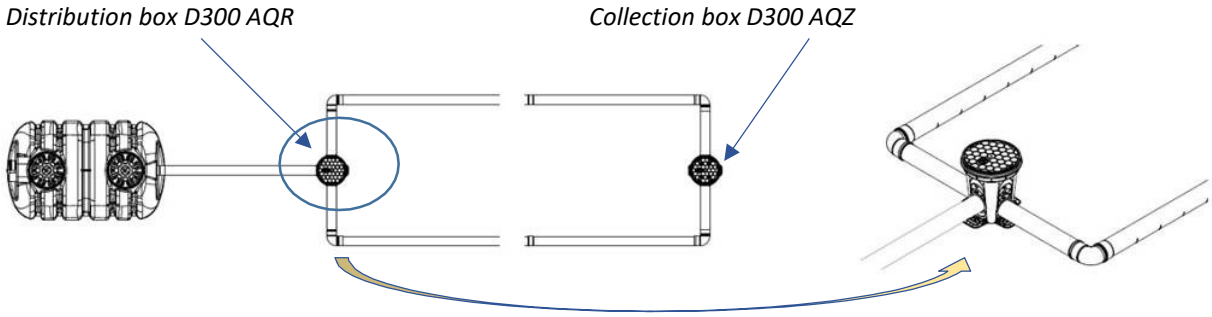

Figure 15: Distribution box D300 AQR - location in the infiltration bed

Length [mm]	Width [mm]	Height [mm]	Weight [kg]	Product code
400	400	410	3	**2480**

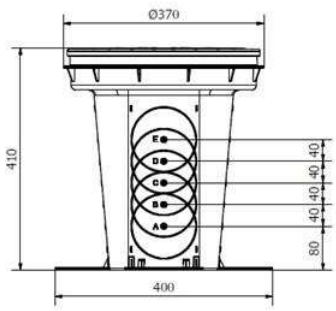

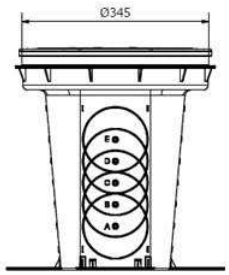

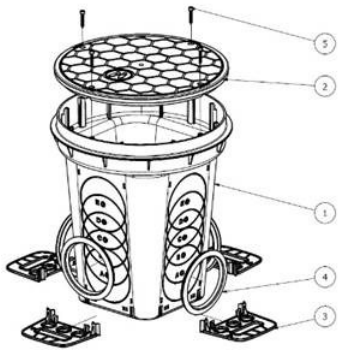

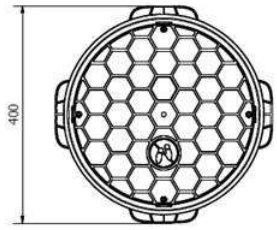

Distribution box D300 AQR		
Number	Name	Quantity [pcs.].
1	Box body	1
2	Cover Ø300	1
3	Stabilisation bracket	4
4	Gasket Ø110 [mm]	4
5	INOX screw	4

The box is installed directly into the ground. Before installation, the inlet and outlet openings should be cut out and the seals installed. The stabilising brackets should be clicked into the prepared sockets in the service hatch body. The purpose of the brackets is to stabilise the service hatch in the excavation and to anchor it to the soil.

O Installation – collection box D300 AQZ

The D300 AQZ connection box is a device responsible for aerating the wastewater in the infiltration drain line or biological bed. It also performs the service function of the bed. The sump can also be used for rainwater drainage or have a technical function in various types of installation. The AQZ service hatch is a monolithic cylinder with a height of 410 mm and service hatch diameter of 300 mm, made of high-density polyethylene PEHD, using the plastic injection method. The service hatch is equipped with a Ø300 mm perforated cover. Up to four inlets from the infiltration basin can be made in the service hatch. The height of the outlets is defined on the service hatch walls. The service hatchs are fitted with a bolted-on superstructure made of polyethylene. Three seals are supplied with each service hatch to fit into the sockets on the service hatch. The sockets are blanked off. They can be cut out with a knife or standard hole saw.

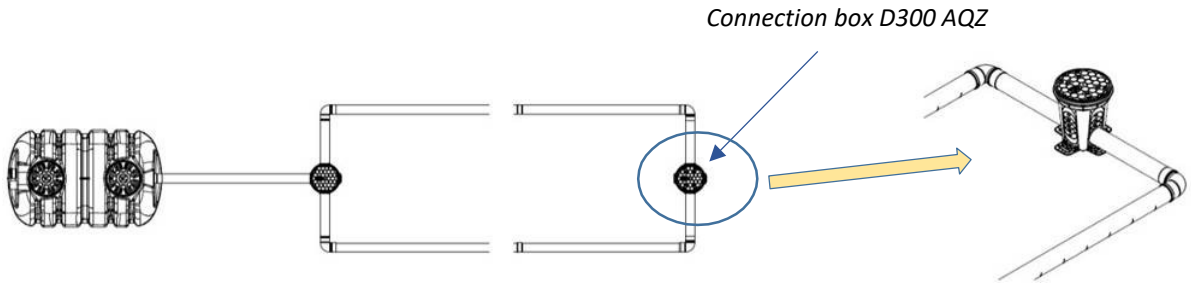

Figure 16: Connection box D300 AQZ - location in the infiltration basin

Length [mm]	Width [mm]	Height [mm]	Weight [kg]	Product code
400	400	410	3	**2481**

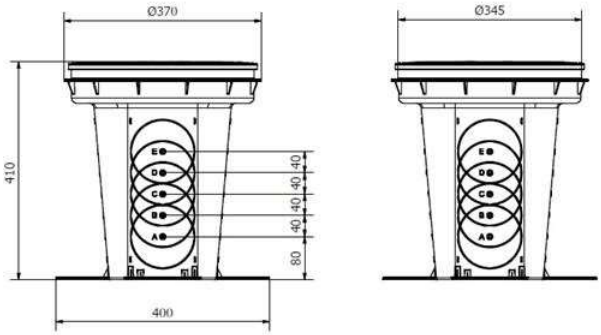

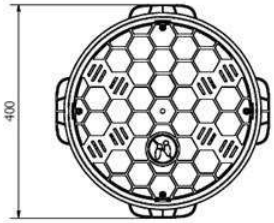

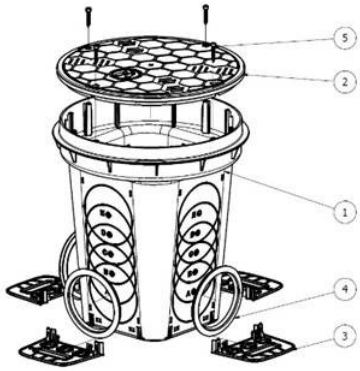

Connection box D300 AQZ		
Number	Name	Quantity [pcs.].
1	Box body	1
2	Cover Ø300	1
3	Stabilisation bracket	4
4	Gasket Ø110 [mm]	3
5	INOX screw	4

The service hatch is installed directly into the ground. Before installation, the outlet openings should be cut out and the seals installed. The stabilising brackets should be clicked into the prepared sockets in the service hatch body. The purpose of the brackets is to stabilise the service hatch in the excavation and to anchor it to the soil.

O Accessories

The septic tank as well as the hatches can be retrofitted with optional superstructures. The superstructures serve to provide a deeper foundation for the septic tank as well as the infiltration bed. The use of original AQUABIN accessories is recommended. It is also possible to extend the infiltration system. For this purpose, drainage pipes suitable for the treatment plant or infiltration tunnels should be used.

BIOPREPARATION AQUABIN START-IP AND DAILY OPERATION

Biological activator for domestic sewage treatment plants for start-up and daily operation. Concentrated biological preparation that decomposes organic waste, eliminates unpleasant odours in settling and biological (aerated) sewage treatment plants. Concentrate containing unique, selected and scientifically developed micro-organisms, responsible for the growth and proper maintenance of the bacterial flora in the treatment plant.

Decomposes organic waste, oils, fats, toilet paper. Destroys unwanted bacteria. Eliminates unpleasant odours. Prevents clogging of drainage and infiltration systems. Supports the formation of the desired activated sludge in biological treatment plants.

The pack sufficient for six months.

- Eliminates unpleasant odours
- Quickly and effectively breaks down waste
- Contains natural bacterial strains
- Unclogs the sewer and drainage system
- Suitable for settling tanks from 2000 to 4000 litres

Method of use:

Professional biological activator AQUABIN start-up and daily operation, we use to maintain and grow the bacterial flora in septic systems from 2000 to 4000 litres. The formulation is suitable for settling tank treatment plants as well as biological treatment plants.
When starting up or restarting the treatment plant, use the red and silver sachet at the same time. Pour the biological preparation AQUABIN purification into the toilet and then drain. Apply once a month. For larger systems increase the dose proportionally. Do not change the frequency of application of the dose.

In order to ensure optimum operation of the sewage treatment system, regular application of AQUABIN biopreparation is recommended for start-up and daily use.

RISER FOR SL-REHC D400 H200 ONTO THE SEPTIC TANK

The riser are made of high-density polyethylene. The riser is removable and adapted to the tank service hatch. The riser is fitted with a dedicated gasket. The use of additional risers makes it possible:

- Foundation of the unit deeper in the ground,
- Service access to the unit.

Name	Diameter [mm]	Height [mm]
Riser REHC D400 H200	400	200

Figure 17: Riser SL-REHC D400 H200 tank with a gasket

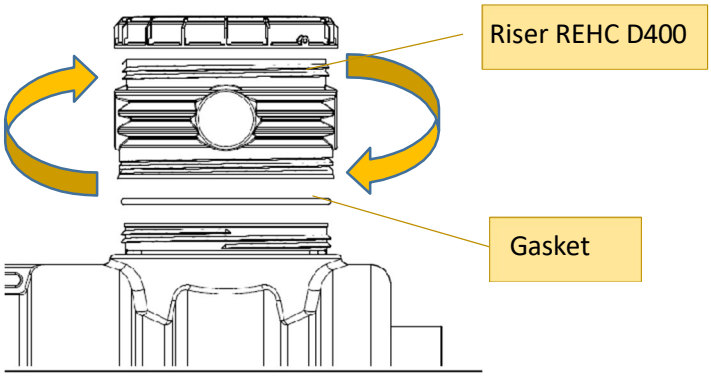

Figure 18*:* Installation of Riser REHC D400 H200 on tank

NOTE: The use of risers other than the original is tantamount to **voiding the warranty.** The manufacturer recommends a maximum of **two additional risers** per service hatch. The use of more risers and foundation of the tank in the ground deeper than an additional 60 cm will **void the warranty.**

SERVICE RISER D300 H150 AQ ON THE BOX

The D300 H150 AQ riser is an overlapping cylindrical extension for the AQR service hatch, closing off the AQZ. It is made of high-density PEHD polyethylene using the plastic injection method. It is characterised by its lightweight transversely and longitudinally ribbed construction. Included with the riser are four mounting screws and a gasket to seal the service box - riser or riser - riser joint.

The use of a riser allows for a deeper foundation of the service box. The riser is assembled by placing the riser on top of it and then screwing in four INOX screws. The active height of the riser is 150 mm.

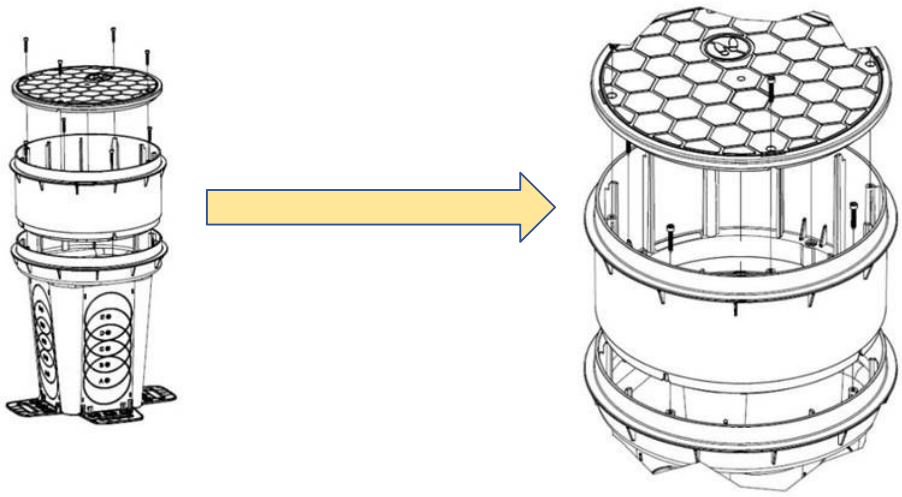

Figure 18: Riser D300 H150 AQ - installation on a service box.

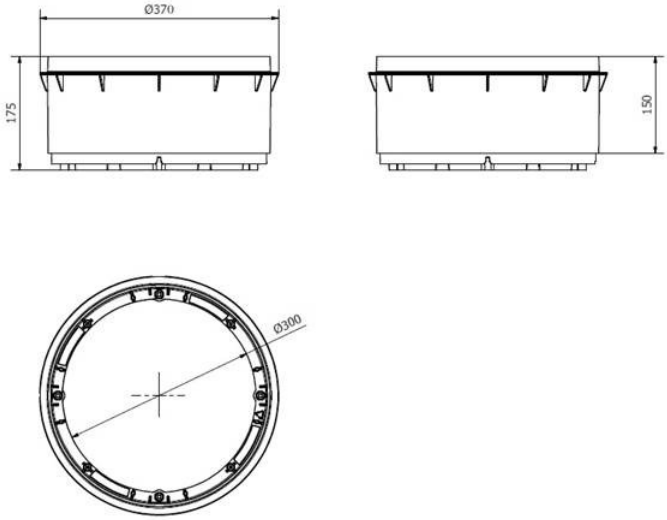

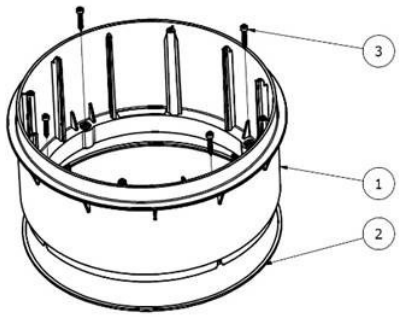

Superstructure D300 H150 AQ		
Number	Name	Quantity [pcs.]
1	Riser body	1
2	Gasket	1
3	INOX screw	4

O Operation and maintenance

The AB treatment plant is an almost maintenance-free device. During the operation of the device, the user is only obliged to take care of maintaining the correct bacterial flora in the septic tank, through regular use of dedicated biological activators and avoiding the use of hazardous substances which may affect the correct functioning of the generated flora. It is also important to remove heavy sludge from the tank on a regular basis, at least once every 2 years and the **manufacturer's recommendation is once every 1 year.**

Malfunctions of the device are indicated by factors such as:

- Outflow of undecomposed substances outside the reactor,
- Unpleasant odour,
- Tank overfilling.

Should any of the above-mentioned factors occur, it is recommended to completely drain the septic tank, refill it with clean water and inoculate it with new bacterial flora.

Procedure to be followed in the event of sediment sludge pumping

The first step is to remove floated substances, i.e. grease and other light substances. Secondly, heavy sludge at the bottom of the tank should be removed. While the work is being carried out, the tank should be topped up successively with clean water. A small amount of sludge should also be left at the bottom of the tank in order to preserve the bacterial flora.

It is recommended, for safety reasons, that the slurry truck be at least 3 metres away from the sewage treatment plant system during sludge disposal.

Pumping out the sludge step by step:

- Remove the service hatch cover,

WARNING: Carry out the operation slowly to allow for the slow drainage of the gases from the fermentation, which are a real danger to those carrying out the maintenance operations, causing the

possibility of poisoning, as well as posing an explosion hazard.

- Feed running water into the settling tank,
- Insert the end of the suction line into the tank,

NOTE: The 2000 septic tanks are equipped with one service hatch. To remove heavy sediment from the 2000 septic tank, remove the bag with filter material and then insert the suction line into the tank through the basket on the bottom of the tank.

NOTE: In the 3000 and 4000 single-chamber septic tanks, a dedicated service hatch on the tank must be used to pump out the sludge.

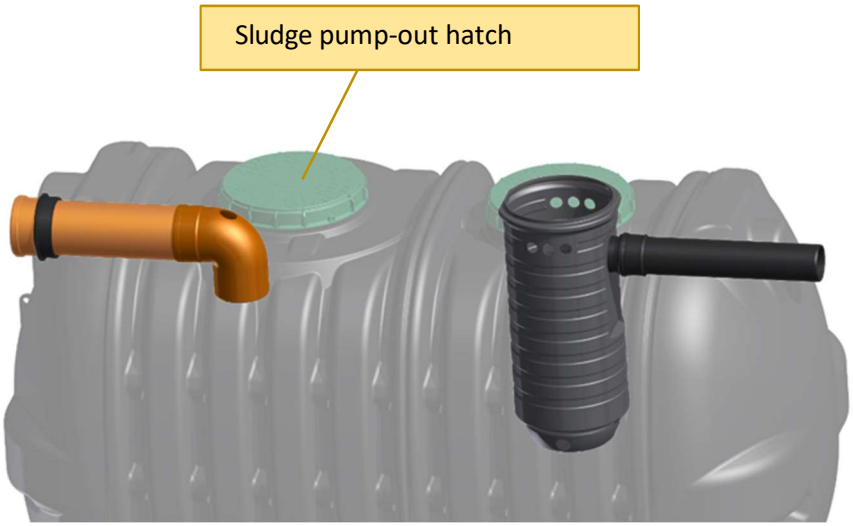

NOTE: For 3000 and 4000 twin-chamber septic tanks, first pump out the primary chambers of the sedimentation tank and then pump out heavy sediments from the main chamber of the septic tank. In order to get to the main chamber, remove the filter material and the basket from the sedimentation tank.

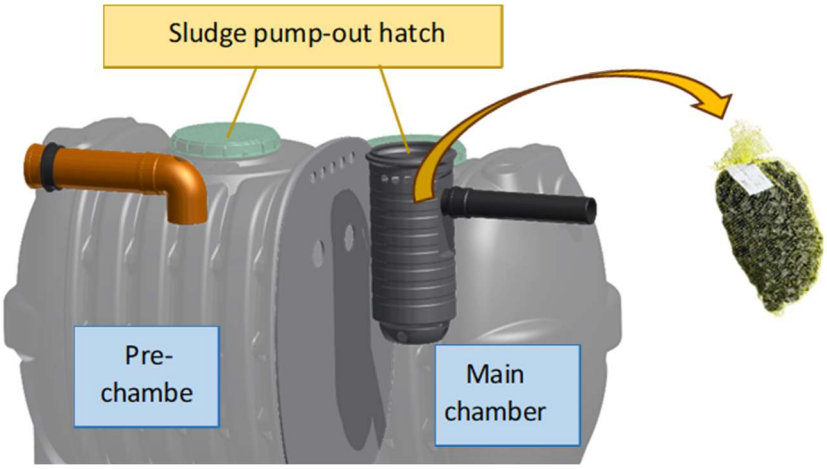

- Vacuum off light impurities,
- Vacuum off heavy sediment,

NOTE: A small layer of sediment should be left at the bottom of the tank to preserve the bacterial flora.

- Remove the suction line from the tank,
- Fill the tank with clean water up to the outlet level,

NOTE: Leaving the tank empty may cause it to crease.

- Add a bioactivator to initiate growth of the bacterial flora,
- Place the covers on the service hatchs and secure with screws.

It is also recommended that when pumping out the wastewater, the filter material in the settling basket is cleaned. The material should be cleaned with pressurised water. If the filter material is visibly worn, it should be replaced with a new one. It is recommended to clean the filter material in the basket once a year.

WARNING: The lids of the treatment plant must be secured against opening by unauthorised persons, especially children (risk of poisoning or drowning). It is forbidden to stand or walk on the lids of the tratment plant, as well as to enter its interior.

NOTE: If any damage is found, the Manufacturer's Service must be notified immediately (applies to the warranty period).

NOTE: The area where the sewage treatment plant (settling tank including infiltration drain) is located is for pedestrian traffic only.

Substances that should not be discharged into the sewage treatment plant: paints, cat litter, cigarette butts, disinfectants, ashes, condoms, varnishes, medicines, motor oils, pesticides, sanitary pads, upholstery glue, thinners, cotton buds, nappies, rinses from water treatment plants, condensate from condensing boilers, chlorine-containing cleaners and other substances that affect the correct operation of the sewage treatment plant.

Typical problems in the operation of AB sewage treatment plants*:*

Unpleasant odours:

- Check the patency of the gas discharge path from the septic tank,
- Check the correctness of the high-level ventilation,
- Check the tightness of the building's toilets, as well as the condition of their traps,
- Check the tightness of the waste water connections.

Overfilling of the unit:

- Check the amount of water used, the plant may be incorrectly sized,
- Check the sevage quality at the outlet of the sedimentation tank,
- Check the filter at the outlet of the sedimentation tank,
- Check the condition of the drainage bed.

Table 7: Frequency and scope of key AB treatment plant maintenance activities

		Frequency		
Device	**Activity**	**Monthly**	**Quarterly**	**Yearly**
AB septic tank	Functional check	•		
	Dosage of biopreparations	•		
	Cleaning the filter material		•	
	Removal of heavy deposits			•

NOTE: Each time the sewage treatment plant is emptied, it should be documented (e.g.: waste disposal bill).

In order to secure the service hatch cover against unwanted opening, a 4.8 mm diameter screw of not less than 32 mm in length should be inserted into the hole located on the cover. The screw, once tightened, will prevent the cover from being opened.

Screw on the cover.

Locate the safety hole.

Place the screw in the hole.

Tighten the screw.

Check that the hatch is well secured.

About the warranty

The manufacturer provides a **two-year warranty period**, starting from the date of sale, for the device. The **ten-year warranty period is granted by the** manufacturer, exclusively for the tank. If a manufacturing defect is detected in the device, which has been confirmed by the AQUABIN Claims Department, we will repair the device free of charge or the defective components will be replaced with new ones. Repair of the device or replacement of the defective components will be carried out in the shortest possible time - no longer than 20 working days. All notifications to the manufacturer under the Guarantee should be made by letter or e-mail.

The warranty does not cover:

- Failure by the contractor to observe the rules for the correct installation of the appliance as described in this User's Manual,
- Failure by the user to observe the rules for the correct operation and handling of the device as described in this User's Manual,
- Interferrence with the design of the device by making arbitrary modifications,
- Mechanical damage resulting from incorrect assembly and transport of the unit,
- Failure to comply with the conditions for selecting the type and size of sewage treatment plant for the number of users and the local soil and water conditions,
- Misuse of the device,
- Higher forces, i.e. the triggering of extraordinary phenomena independent of human will (atmospheric, geological).

Health and safety rules

Work associated with the installation of a domestic sewage treatment plant is classed as particularly hazardous work due to the risk of accidents. These are mainly activities associated with:

- Work with electrical equipment,
- Work carried out below ground level,
- Contact with hazardous biological agents that may be present in wastewater,
- Work to connect the unit to the 230V mains supply.

When carrying out this type of work, it is important to bear in mind the safety requirements of yourself and those present during the work. All work, due to its special nature, should be carried out by teams of at least two people. All tools used, as well as construction equipment, should be in good working order and workers should have the necessary qualifications for the work to be carried out.

O Declaration of performance – AB septic tanks

The AB septic tanks are manufactured in accordance with the PN-EN 12566-1:2016. Below you will find the manufacturer's declaration of performance.

AQUABIN

DECLARATION OF PERFORMANCE

NR 04/2024

CE

1. **The name and trade name of the product:**
   Septic tanks AB
2. **Unique identification code of the product type:**
   Septic tank 2000 AB (AT122 2000l),
   Septic tank 3000 AB (AT122 3000l) (single and double chamber)
   Septic tank 4000 AB (AT122 4000l) (single and double chamber)
3. **Intended use(s):**
   Collection, treatment and disposal of domestic wastewater for a calculated number of inhabitants up to 50
4. **Name and address of the manufacturer's head office:**
   AQUABIN Michał Stangreciak, ul. Grafitowa 8/5, 05-800 Pruszków
5. **Name and business address of the authorized representative, if any:**
   not applicable
6. **System of assessment and verification of constancy of performance:**
   System 3
7. **Harmonized standard**: EN 12566-1 Small wastewater treatment systems for up to 50 PT - Part 1: Prefabricated septic tanks
   Type Certificate Number: NF EN 12566-1+A1, Technical Assessment Body: CERIB 1164
   Name of the accredited certification body, accreditation number and certificate number:1164
8. **Declared performance characteristics:**

Essential characteristics of the construction product for the intended use	Declared performance characteristics		
	Septic tank *2000AB*	Septic tank *3000 AB*	Septic tank *4000 AB*
Nominal capacity (NC)	2,0	3,0	4,0
Water tightness (water test)	Positive result	Positive result	Positive result
Structural strength	Positive result	Positive result	Positive result
Cleaning performance/hydraulic capacity	P_A=8,3g±0,01 99,9%	P_A=8,3g±0,01 99,9%	P_A=8,3g±0,01 99,9%
Dirability	Positive result	Positive result	Positive result
External appearance	No burrs or sharp edges	No burrs or sharp edges	No burrs or sharp edges
Reaction to fire class	E	E	E
Crush resistance EN 12566-1+A1	Backfill: 0,08 m WET: 1,45 m		

AQUABIN Michał Stangreciak, ul. Grafitowa 8/5, PL 05-800 Pruszków

AQUABIN.PL

AQUABIN

9. The performance of the product identified above complies with all the declared performance characteristics listed in section 8. This declaration of performance is issued in accordance with Regulation (EU) No 305/2011 under the sole responsibility of the manufacturer.

Signed:

Michał Stangreciak, Owner

(name, position)

AQUABIN Michał Stangreciak
05-800 Pruszków, ul. Grafitowa 8/5
NIP : 836-173-12-03 REGON: 101730364
info@aquabin.pl +48 530 777 000
www.aquabin.pl

(Signature)

Pruszków, 02.01.2024

(Place and date)

For septic tanks, there is no need to measure treatment efficiency.
From the manufacturer's empirical studies, AB sedimentation tanks have a reduction rate:

- BOD_5 - reduction of up to 50%,
- Total suspended solids - reduction of up to 60%,
- Total nitrogen - reduction of up to 40%,
- Total phosphorus - no reduction.

AB septic tanks will meet the requirement of § 11, point 4, sub-point 2, REGULATION OF THE MINISTER FOR MARITIME AFFAIRS AND INLAND NAVIGATION of 12 July 2019 on substances particularly harmful to the aquatic environment and conditions to be met when discharging waste water into waters or into the ground, and when discharging rainwater or snowmelt into waters or into water facilities.
Official Gazette - 2019 item 1311

National Declaration of Performance - INFILTRATION TUNNELS 150

TYCNER

KRAJOWA DEKLARACJA WŁAŚCIWOŚCI UŻYTKOWYCH

NR 3/2023/S

1. **Nazwa i nazwa handlowa wyrobu budowlanego:**
   Tunel rozsączający 150, Tunel rozsączający 300 DUO
   Dekiel 150
2. **Oznaczenie typu wyrobu budowlanego:**
   Złoże rozsączające TYCNER
3. **Zamierzone zastosowanie lub zastosowania:**
   Rozsączanie ścieku podczyszczonego, oczyszczonego i wody deszczowej w gruncie.
4. **Nazwa i adres siedziby producenta oraz miejsce produkcji wyrobu:**
   TYCNER Sp. z o.o. ul. Wojska Polskiego 6B, 39-300 Mielec
5. **Nazwa i adres siedziby upoważnionego przedstawiciela, o ile został ustanowiony: nie dotyczy**
6. **Krajowy system zastosowany do oceny i weryfikacji stałości właściwości użytkowych: System 4**
7. **Krajowa specyfikacja techniczna:**
   7a. Polska Norma wyrobu: nie dotyczy
   Nazwa akredytowanej jednostki certyfikującej, numer akredytacji i numer krajowego certyfikatu lub nazwa akredytowanego laboratorium/laboratoriów i numer akredytacji: **nie dotyczy**
   7b. Krajowa ocena techniczna: ITP-PIB-KOT-2022/0015 wydanie 3
   Jednostka oceny technicznej/ Krajowa jednostka oceny technicznej: **Instytut Technologiczno-Przyrodniczy – Państwowy Instytut Badawczy**
   Nazwa akredytowanej jednostki certyfikującej, numer akredytacji i numer certyfikatu: **nie dotyczy**
8. **Deklarowane właściwości użytkowe:**

Zasadnicze charakterystyki wyrobu budowlanego do zamierzonego zastosowania	Deklarowane właściwości użytkowe
Wygląd zewnętrzny	Brak uszkodzeń
Barwa	Jednolita
Odporność na uderzenia	Brak pęknięć
Wymiary: Tunel rozsączający 150	1200 mm x 500 mm x 360 mm
Wymiary: Tunel rozsączający 300 DUO	1200 mm x 500 mm x 720 mm
Wymiary: Dekiel 150	435 mm x 335 mm x 43 mm

9. **Właściwości użytkowe określonego powyżej wyrobu są zgodne z wszystkimi wymienionymi w p. 8 deklarowanymi właściwościami użytkowymi. Niniejsza krajowa deklaracja właściwości użytkowych wydana zostaje zgodnie z ustawą z dnia 16 kwietnia 2004 r. o wyrobach budowlanych, na wyłączną odpowiedzialność producenta.**

W imieniu producenta podpisał(-a)

WOJCIECH TYCNER - PREZES ZARZĄDU

(imię i nazwisko, stanowisko)

Mielec, 17.01.2023

(Miejsce i data wydania)

Tycner sp. z o.o.
ul. Wojska Polskiego 6B
39-300 Mielec
tel. 48 17 7745900
NIP: 8172205293

(Podpis)

Tycner sp. z o.o.
(dawniej PPUH Wojciech Tycner)
ul. Wojska Polskiego 6B, 39-300 Mielec, Polska
Tel. +48 17 774 59 00
biuro@tycner.com.pl

NIP 8172205293
REGON 522174664
Sąd Rejonowy w Rzeszowie,
XII Wydział Gospodarczy KRS 0000974730
Kapitał zakładowy 1 000 000 zł

National Declaration of Performance - DRAIN PIPES

TYCNER

KRAJOWA DEKLARACJA WŁAŚCIWOŚCI UŻYTKOWYCH

NR 4/2023/S

1. **Nazwa i nazwa handlowa wyrobu budowlanego:**
   Rura drenażowa D110 L2000
2. **Oznaczenie typu wyrobu budowlanego:**
   Złoże rozsączające TYCNER
3. **Zamierzone zastosowanie lub zastosowania:**
   Rozsączanie ścieku podczyszczonego, oczyszczonego i wody deszczowej w gruncie.
4. **Nazwa i adres siedziby producenta oraz miejsce produkcji wyrobu:**
   TYCNER Sp. z o.o. ul. Wojska Polskiego 6B, 39-300 Mielec
5. **Nazwa i adres siedziby upoważnionego przedstawiciela, o ile został ustanowiony: nie dotyczy**
6. **Krajowy system zastosowany do oceny i weryfikacji stałości właściwości użytkowych: System 4**
7. **Krajowa specyfikacja techniczna:**
   7a. Polska Norma wyrobu: nie dotyczy
   Nazwa akredytowanej jednostki certyfikującej, numer akredytacji i numer krajowego certyfikatu lub nazwa akredytowanego laboratorium/laboratoriów i numer akredytacji: **nie dotyczy**
   7b. Krajowa ocena techniczna: ITP-PIB-KOT-2022/0015 wydanie 3
   Jednostka oceny technicznej/ Krajowa jednostka oceny technicznej: **Instytut Technologiczno-Przyrodniczy – Państwowy Instytut Badawczy**
   Nazwa akredytowanej jednostki certyfikującej, numer akredytacji i numer certyfikatu: **nie dotyczy**
8. **Deklarowane właściwości użytkowe:**

Zasadnicze charakterystyki wyrobu budowlanego do zamierzonego zastosowania	Deklarowane właściwości użytkowe
Oznakowanie	Rura drenażowa D110 L2000
Wygląd zewnętrzny	Brak uszkodzeń
Wymiary zewnętrzne	Długość 2070 mm, średnica 110 mm

9. **Właściwości użytkowe określonego powyżej wyrobu są zgodne z wszystkimi wymienionymi w p. 8 deklarowanymi właściwościami użytkowymi. Niniejsza krajowa deklaracja właściwości użytkowych wydana zostaje zgodnie z ustawą z dnia 16 kwietnia 2004 r. o wyrobach budowlanych, na wyłączną odpowiedzialność producenta.**

W imieniu producenta podpisał(-a)

WOJCIECH TYCNER - PREZES ZARZĄDU

(imię i nazwisko, stanowisko)

Mielec, 17.01.2023

(Miejsce i data wydania)

(Podpis)

Tycner sp. z o.o.
ul. Wojska Polskiego 6B
39-300 Mielec
tel. 48 17 7745900
NIP: 8172205293

Tycner sp. z o.o.
(dawniej PPUH Wojciech Tycner)
ul. Wojska Polskiego 6B, 39-300 Mielec, Polska
Tel. +48 17 774 59 00
biuro@tycner.com.pl

NIP 8172205293
REGON 522174664
Sąd Rejonowy w Rzeszowie,
XII Wydział Gospodarczy KRS 0000974730
Kapitał zakładowy 1 000 000 zł

National Declaration of Performance - DISTRIBUTION AND CONNECTION BOXES

TYCNER

KRAJOWA DEKLARACJA WŁAŚCIWOŚCI UŻYTKOWYCH

NR 1/2023/S

1. **Nazwa i nazwa handlowa wyrobu budowlanego:**
   Studzienka rozdzielcza D300 AQR
   Studzienka zamykająca D300 AQZ
   Nadbudowa D300 H150 AQ
2. **Oznaczenie typu wyrobu budowlanego:** Złoże rozsączające TYCNER
3. **Zamierzone zastosowanie lub zastosowania:**
   Rozsączanie ścieku podczyszczonego, oczyszczonego i wody deszczowej w gruncie.
4. **Nazwa i adres siedziby producenta oraz miejsce produkcji wyrobu:**
   TYCNER Sp. z o.o. ul. Wojska Polskiego 6B, 39-300 Mielec
5. **Nazwa i adres siedziby upoważnionego przedstawiciela, o ile został ustanowiony: nie dotyczy**
6. **Krajowy system zastosowany do oceny i weryfikacji stałości właściwości użytkowych: System 4**
7. **Krajowa specyfikacja techniczna:**
   7a. Polska Norma wyrobu: nie dotyczy
   Nazwa akredytowanej jednostki certyfikującej, numer akredytacji i numer krajowego certyfikatu lub nazwa akredytowanego laboratorium/laboratoriów i numer akredytacji: **nie dotyczy**
   7b. Krajowa ocena techniczna: ITP-PIB-KOT-2022/0015 wydanie 3
   Jednostka oceny technicznej/ Krajowa jednostka oceny technicznej: **Instytut Technologiczno-Przyrodniczy - Państwowy Instytut Badawczy**
   Nazwa akredytowanej jednostki certyfikującej, numer akredytacji i numer certyfikatu: **nie dotyczy**
8. **Deklarowane właściwości użytkowe:**

Zasadnicze charakterystyki wyrobu budowlanego do zamierzonego zastosowania	Deklarowane właściwości użytkowe
Wygląd zewnętrzny	Brak uszkodzeń
Barwa	Jednolita
Odporność na uderzenia	Brak pęknięć
Wymiary: Studzienka rozdzielcza D300 AQR	410 mm x 400 mm x 400 mm
Wymiary: Studzienka zamykająca D300 AQZ	410 mm x 400 mm x 400 mm
Wymiary: Nadbudowa D300 H150 AQ	370 mm x 370 mm x 175 mm

9. **Właściwości użytkowe określonego powyżej wyrobu są zgodne z wszystkimi wymienionymi w p. 8 deklarowanymi właściwościami użytkowymi. Niniejsza krajowa deklaracja właściwości użytkowych wydana zostaje zgodnie z ustawą z dnia 16 kwietnia 2004 r. o wyrobach budowlanych, na wyłączną odpowiedzialność producenta.**

W imieniu producenta podpisał(-a)

WOJCIECH TYCNER - PREZES ZARZĄDU

(imię i nazwisko, stanowisko)

Mielec, 17.01.2023

(Miejsce i data wydania)

Tycner sp. z o.o.
ul. Wojska Polskiego 6B
39-300 Mielec
tel. 48 17 7745900
NIP: 8172205293

(Podpis)

Tycner sp. z o.o.
(dawniej PPUH Wojciech Tycner)
ul. Wojska Polskiego 6B, 39-300 Mielec, Polska
Tel. +48 17 774 59 00
biuro@tycner.com.pl

NIP 8172205293
REGON 522174664
Sąd Rejonowy w Rzeszowie,
XII Wydział Gospodarczy KRS 0000974730
Kapitał zakładowy 1 000 000 zł

Plant log

Date	Device control	Maintenance task carried out	Comments	Person carrying out the activity	Controlling person's signature

We recommend the purchase of other AQUABIN products

AQUABIN®

www.aquabin.pl